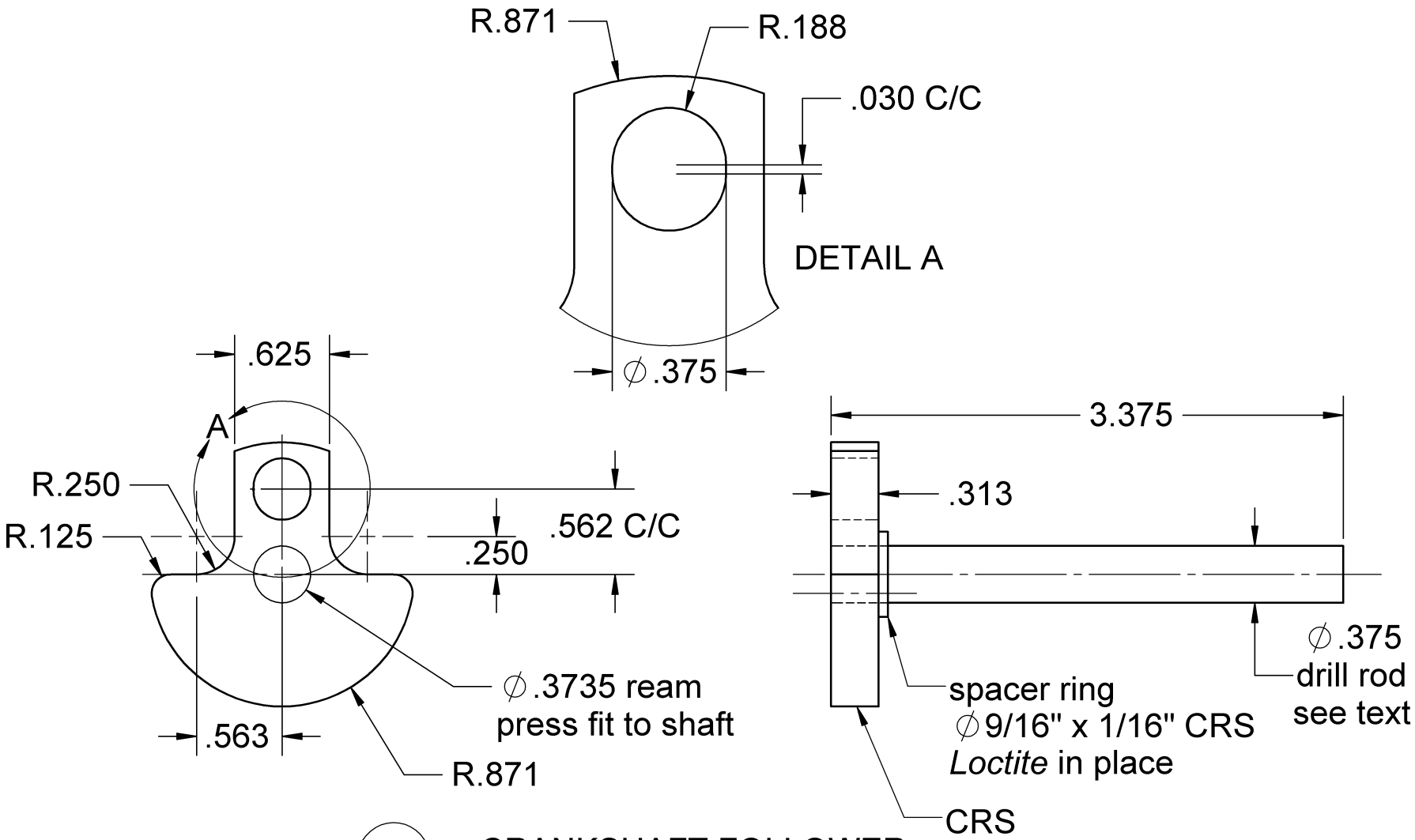

10 CRANKSHAFT FOLLOWER
mat'l - CRS and drill rod assembly