9

CRANKSHAFT

mat'l - CRS and drill rod assembly
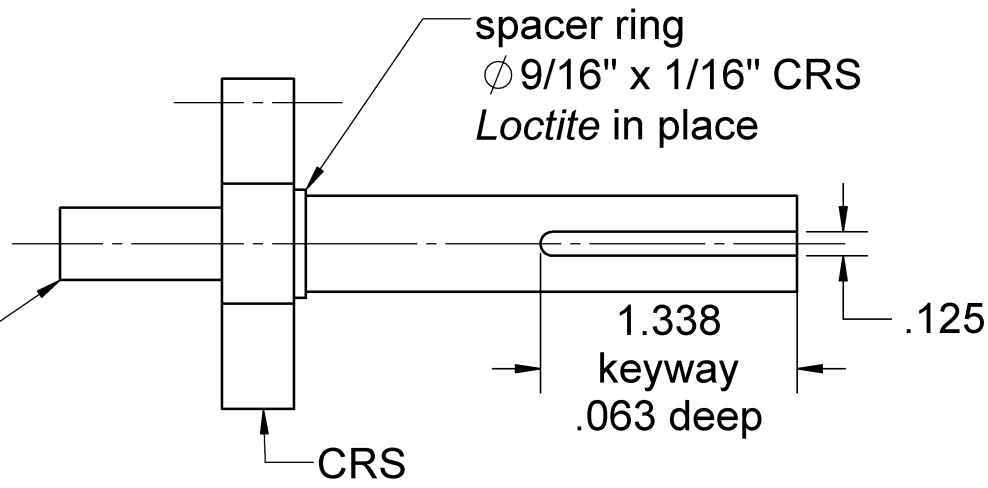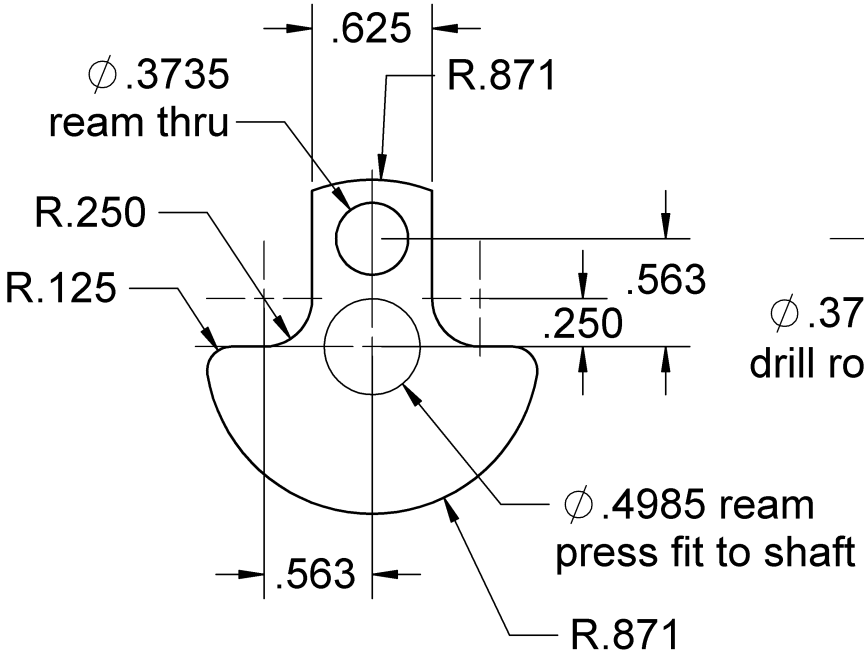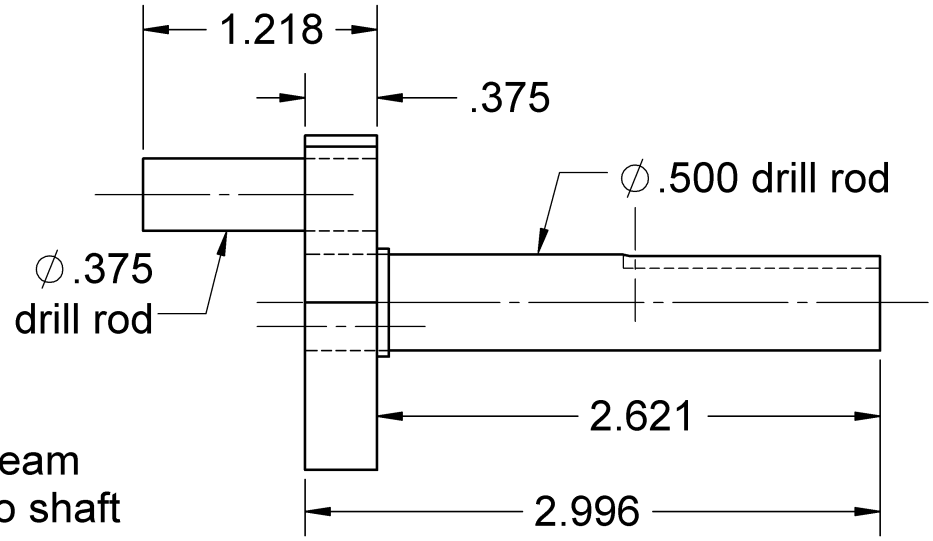
harden this part only
heat to red and quench
before pressing into place