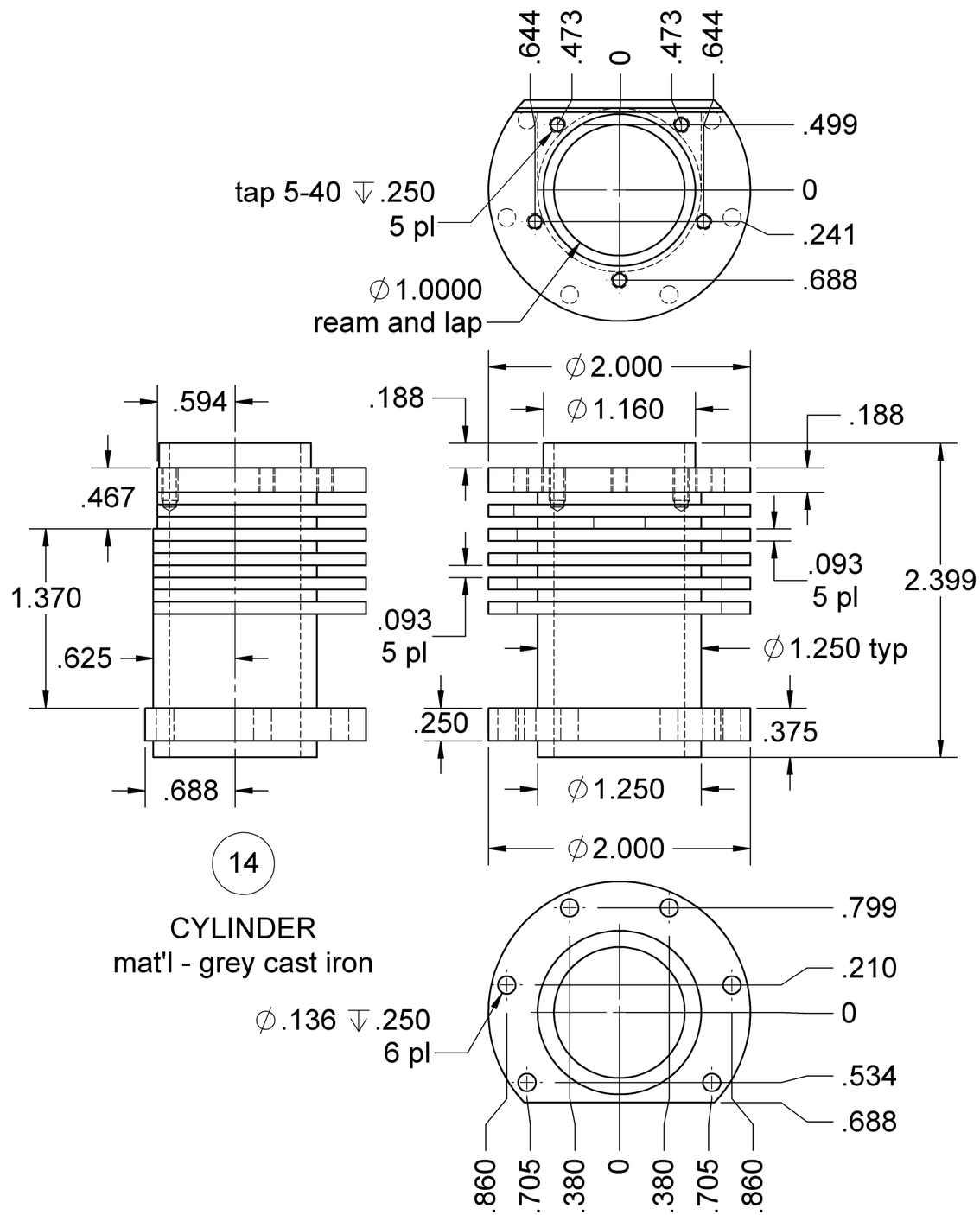
.644
.473
0
.473
.644
.499
tap 5-40 ↧.250
5 pl
0
.241
∅1.0000
ream and lap
.688
∅2.000
.594
.188
∅1.160
.188
.467
.093
5 pl
2.399
1.370
.093
5 pl
∅1.250 typ
.625
.250
.375
.688
∅1.250
∅2.000
14
CYLINDER
mat'l - grey cast iron
.799
.210
∅.136 ↧.250
6 pl
0
.534
.688
.860
.705
.380
0
.380
.705
.860