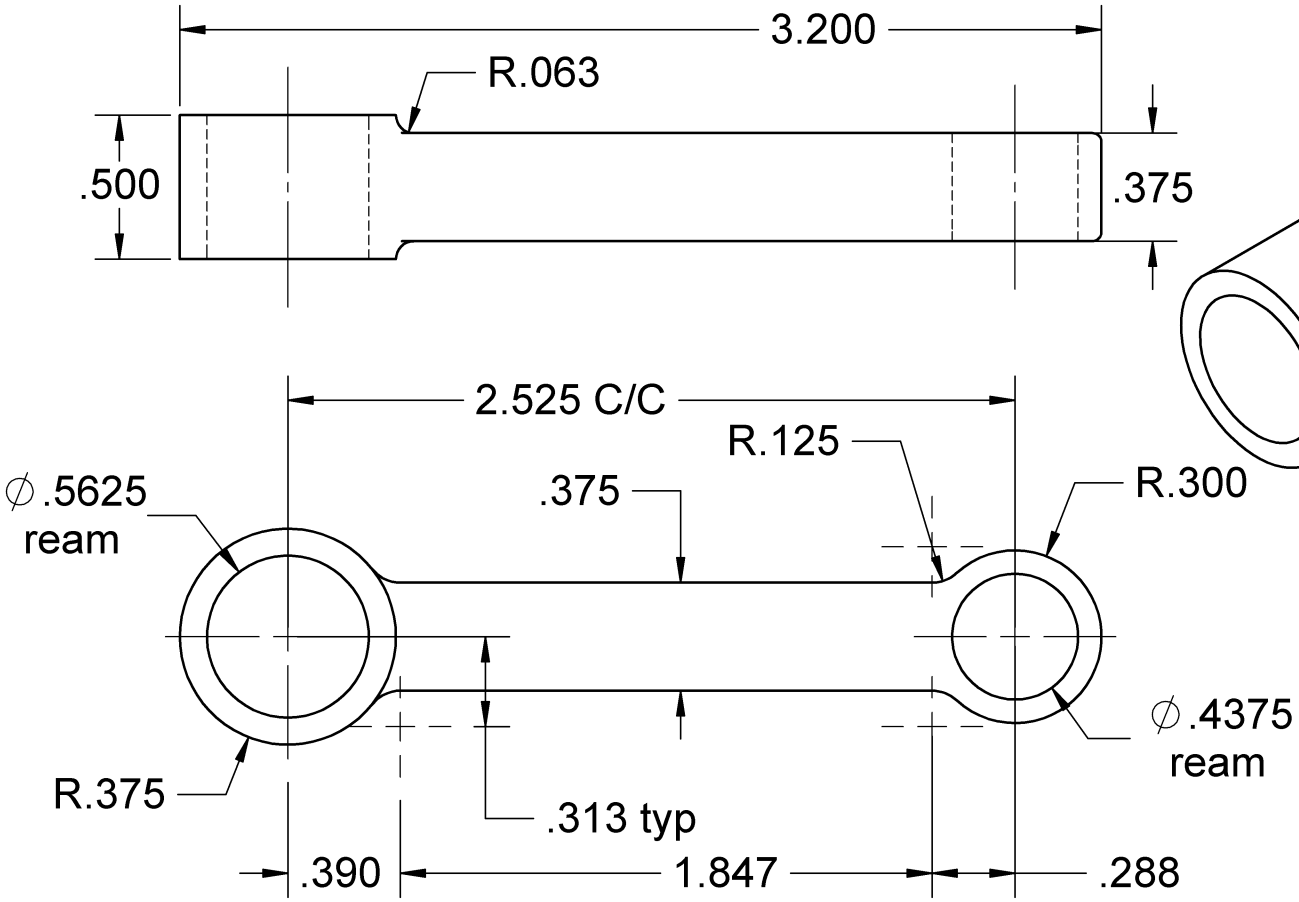

23

CONNECTING ROD
mat'l - aluminum

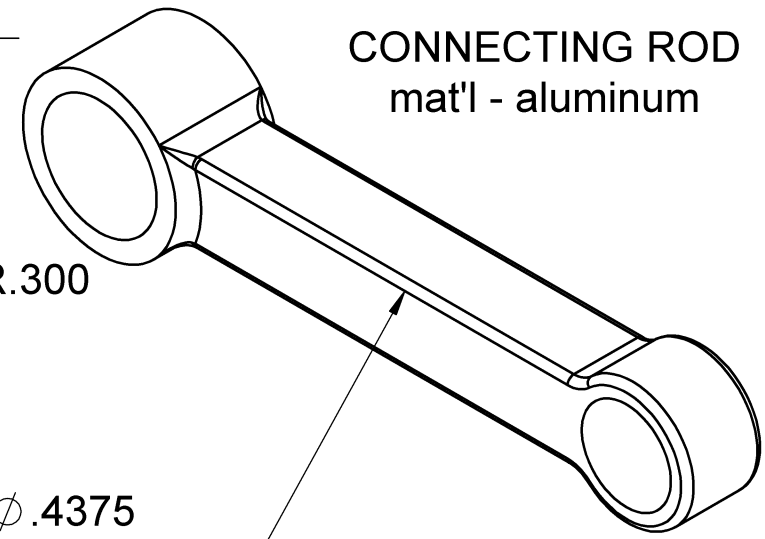

file approx. .040 rad. on
all 4 sides and around
small end of con-rod