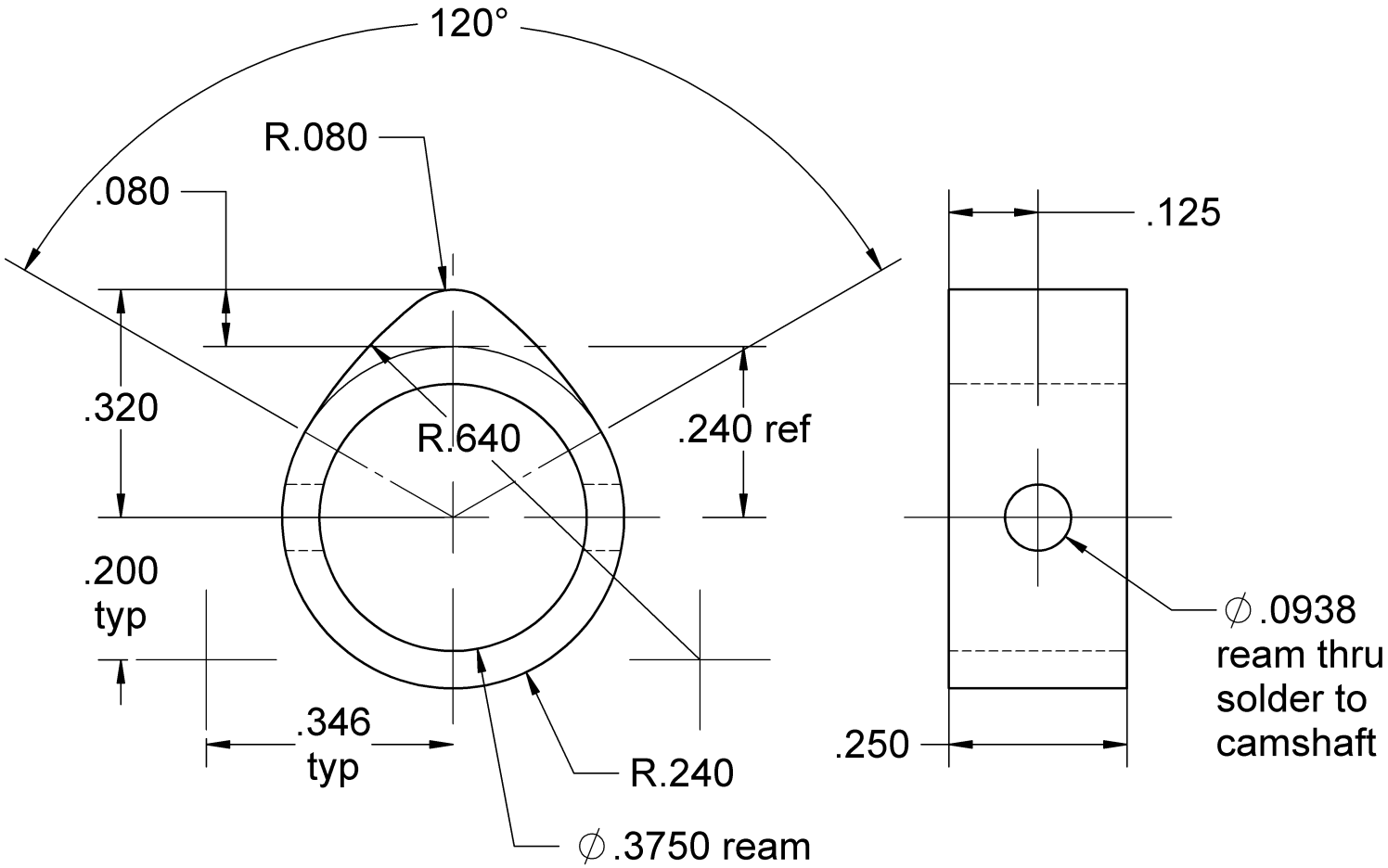

CAM

31 mat'l - water hardening steel
harden to 55 Rockwell C
2 req'd