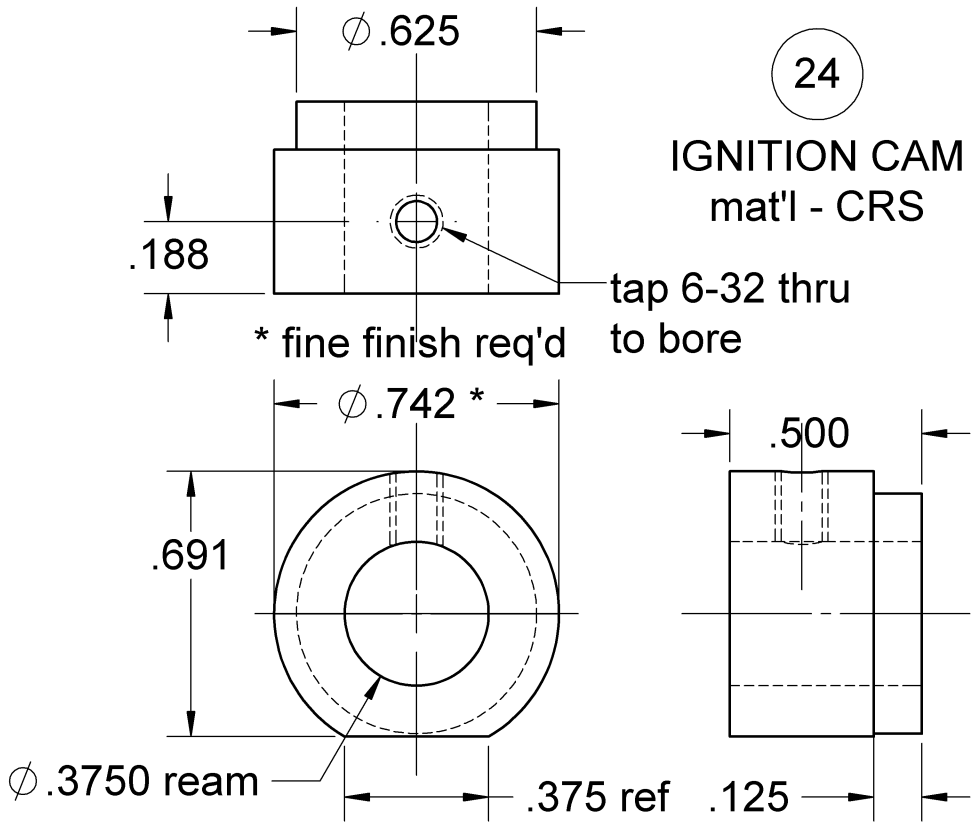

24

IGNITION CAM
mat'l - CRS